IAES International Journal of Artificial Intelligence (IJ-AI)
Vol. 15, No. 6, December 2026, pp. 5050~5060
ISSN: 2252-8938, DOI: 10.11591/ijai.v15.i6.pp5050-5060

Data-driven internet of things for intelligent decision support in smart greenhouse management

Mohammed Saddam Abdulhadi, Mohamed Ismail Lafta, Ahmed Yaseen Mohammed
Department of Computer Science, College of Applied Sciences, University of Samarra, Samarra, Iraq

Article Info

Article history:

Received Oct 18, 2025
Revised Aug 5, 2026
Accepted Aug 31, 2026

Keywords:

Intelligent decision support
Intelligent internet of things
Multi-sensor data fusion
Precision agriculture
Sensor network
Smart greenhouse

ABSTRACT

The pursuit of sustainable food production faces numerous challenges stemming from climate change, water scarcity, and the decline of arable land. This study proposes an innovative, internet of things (IoT)-enabled smart greenhouse system that achieves high accuracy thanks to a decision support system based on the integration of data from multiple sensors and a rules-based adaptive inference system. Data is collected from soil moisture, temperature, and pH sensors and processed in real-time via an integrated ESP32 controller. The decision support system evaluates the sensor data and provides recommendations on necessary actions, such as irrigation requirements, temperature control, and pH regulation. The Blynk platform facilitates remote monitoring via mobile and web applications. The system's performance was tested under realistic conditions by cultivating red radishes in both smart and traditional greenhouses with sandy soil under challenging climatic conditions. Applying smart greenhouse technology increased the average root weight from 21 to 37.6 g, plant height from 16.3 to 21.3 cm, and root length from 7.7 to 9.3 cm, while reducing the growth period from 42 to 30 days. These results indicate that smart decision-making combined with the IoT can increase agricultural productivity, improve resource utilization, and lead to sustainable development in precision agriculture.

This is an open access article under the CC BY-SA license.

Corresponding Author:

Mohamed Ismail Lafta
Department of Computer Science, College of Applied Sciences, University of Samarra
Samarra, Iraq
Email: mohamed1988@uosamarra.edu.iq

1. INTRODUCTION

Most economies rely on agriculture as a primary source of employment and food production to meet the growing needs of the world's population [1], [2]. The United Nations is working to promote the sustainable development goals (SDG) with the aim of impacting the agricultural sector [3]. Agriculture is undergoing a change thanks to artificial intelligence (AI) and internet of things (IoT)-based smart agricultural technology [4]. It is a vital economic sector, and given that agricultural production is fundamentally dependent on water availability, the success of this vital sector hinges on access to water [5]. Based on Food and Agriculture Organization of the United Nations (FAO), agriculture accounts for more than 12% of all land area and provides a living for over 60% of world's population [6]. The FAO estimates that the world's population will reach 8 billion by 2025 and 9.6 billion by the end of 2050. Data analysis indicates that global food supplies will need to increase by more than 70% by 2050 to keep pace with population growth [7], [8]. To ensure long-term food and agricultural security in the face of population growth, decreasing arable land, and climate change, innovative approaches are essential [9]. With the use of many technologies, including the IoT, a lot of work has already been done in precision agriculture [10]. Waste in the irrigation sector, which consumes a lot of fresh water, might have a major negative impact on food security [11]. Therefore,

state-of-the-art technologies like the IoT are being integrated for enhancing the precision irrigation system as well as managing and targeting irrigation and control strategies for anticipating and optimizing while taking environmental changes into account for increasing water use efficiency through precision irrigation [12], [13]. In order to boost food production and reduce farmer stress, precision irrigation technologies are essential. In order to respond to changing weather and soil dynamics, a precision irrigation system that could adapt, predict, and deliver the appropriate amount of water to crops when and where they need it is thus required [14]. Data-driven decision support systems are necessary for the best possible utilization of greenhouse farming since it is a sustainable response to food crises [15]. Because it regulates the local climate and enables crops to be grown year-round, even in harsh weather conditions, greenhouse agriculture is seen as a sustainable and viable solution to future food crisis [16], [17]. Through assessing micro-soil characteristics like temperature, and humidity, soil monitoring in conjunction with IoT technology aids in agricultural improvement [18], [19].

Many previous studies on IoT technology in agriculture were reviewed, including some proposed and implemented IoT solutions in smart agriculture applications. Among these proposals, Muangprathub *et al.* [20] designed a control box device for collecting and operating crop data. Soil moisture sensors are used to monitor the field. A mobile application was developed to manage field and crop data. Tripathy *et al.* [21] proposed using a variety of sensors to monitor multiple parameters, including humidity, temperature, water nutrient solution level, and UV intensity. Farooq *et al.* [22] proposed establishing an IoT-based network infrastructure, along with implementing control mechanisms to efficiently manage resources such as humidity and temperature. Ahmad *et al.* [23] proposed a smart greenhouse monitoring system based on a Raspberry Pi microcontroller to create an intelligent automation system for regulating the humidity and temperature of greenhouse soil. Sadek *et al.* [24] proposed the design and implementation of an IoT-enabled smart greenhouse system that controls light intensity, temperature, and total dissolved solids. Song *et al.* [25] proposed developing an intelligent greenhouse control system using IoT technology, including humidity, temperature, and light. Although these studies have successfully automated environmental monitoring and control, most rely on independent threshold-based control strategies in which each sensor is evaluated separately. Such approaches do not adequately consider the combined influence of multiple environmental variables, limiting their adaptability and decision accuracy under dynamic greenhouse conditions. The issue of sustainable food production in light of factors such as climate change, water shortage, and the reduction of arable land has become a globally pressing issue. The IoT is key to modern agriculture technology with improved water efficiency when irrigating and better crop growing conditions. In this article, a smart greenhouse system based on IoT empowered solutions is designed. It is a state-of-the-art technology making it possible to automate irrigation and environmental conditions monitoring and management. The system incorporates soil moisture, temperature, and pH sensors into the ESP32 microcontroller, allowing providing desirable crop conditions. What is more, the Blynk application enables monitoring and controlling the operations carried out by the smart greenhouse remotely using mobile phones and computers.

2. METHOD

The goal of this research is to create systems for farmers that enable them to supervise their operation from afar. Smart greenhouse technology using the IoT facilitates the control of different components [26], [27]. The system suggested consists of environmental sensing devices that are connected to an ESP32 microcontroller and share the same communication channel. The data from the sensors are sent to a control system that immediately starts processing the information accordingly. Unlike traditional IoT systems that treat every sensor individually, the suggested structure uses the interaction of multiple parameters to ensure better accuracy and adaptability of an IoT system. The automatic irrigation system provides the observation of the parameters of the soil, saves it, and delivers it to the control system. The control system utilizes an intelligent processing unit that performs data fusion of soil parameters such as moisture, temperature, and pH level at the same time. The information processed forms rules for making decisions from an environmental control perspective.

First, the ESP32 controller elects readings of dirt humidness through the soil humidness detector and sends such readings to the intelligent decision-making support layer. It then compares the reading with the expected dry humus level. The decision-making support layer issues an irrigation command as soon as the measurement drops below such expected levels and starts the operation of the water pump.

Second, the control system collects temperature data from the DHT22 sensor and sends it to the decision support system, which examines the measured temperature and compares it with the optimal temperature range that has been set. Should the temperature be below the desired level, the heating apparatus is activated. On the other hand, should the temperature be above the upper limit; the cooling fans are put into operation.

Third, the intelligent decision support layer receives the pH reading of the soil through a pH sensor and sends its output for comparison to the pH standard range. If the pH goes beyond the acceptable values (becomes either too acidic or alkaline), the system triggers a dosing mechanism in order to normalize the pH of the soil. Unlike the case of sending the instructions to the dosing pump to make the adjustments, the intelligent decision support layer applies a multi-sensor approach and processes the data received from the sensor systems including soil moisture, soil temperature, and pH. Thus, the adopted intelligent decision support system is able to minimize the risk of taking wrong actions on the basis of isolated readings from separated sensors and thus provide better management efficiency and effectiveness. Thus, Figure 1 shows the architecture of the new intelligent greenhouse system that includes the components like the environmental sensors, ESP32 microcontroller, intelligent decision support system, and actuator devices that perform the functions of watering, temperature control and soil pH maintenance. Figure 2 presents the stage of the intelligent decision support algorithm in action.

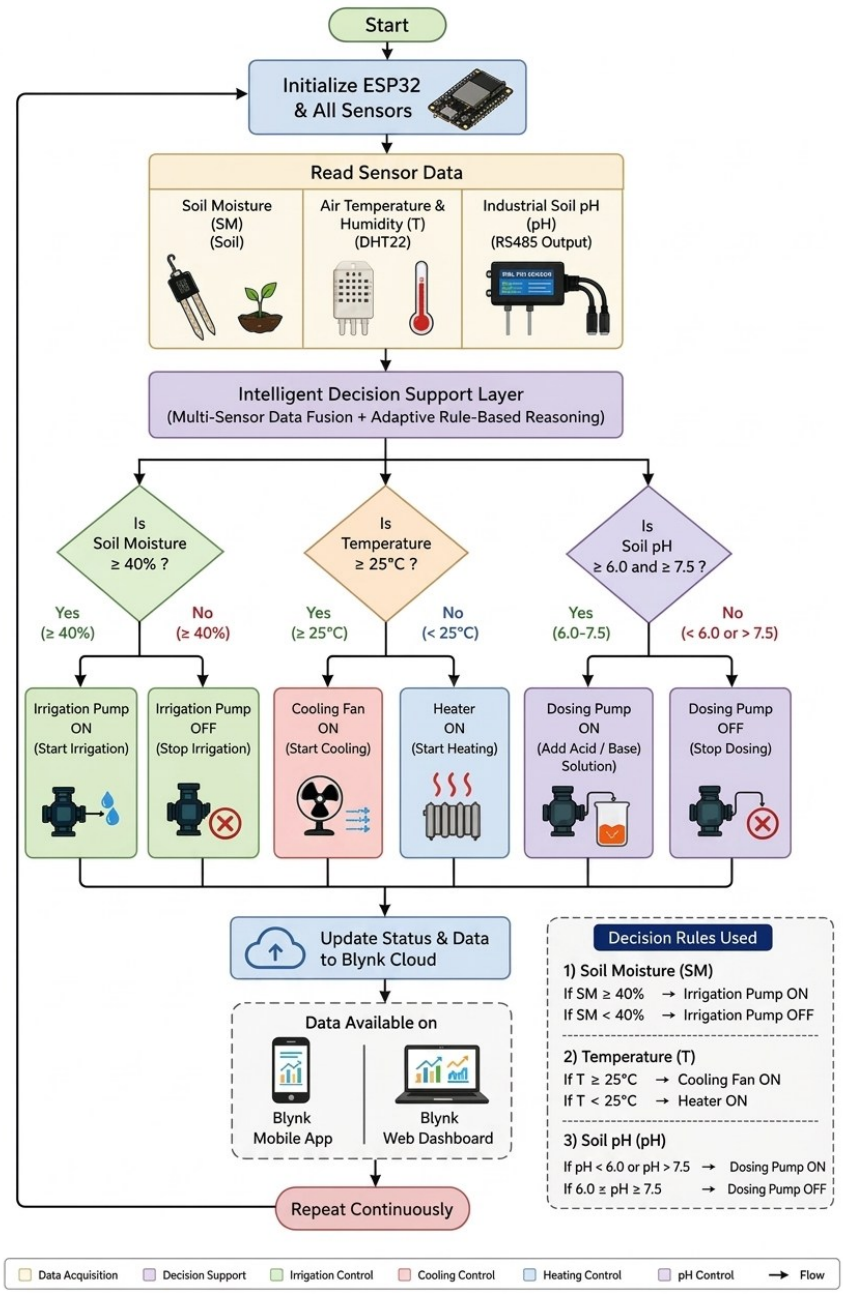

Figure 1. Proposed intelligent IoT-enabled smart greenhouse architecture incorporating an intelligent decision support layer for multi-sensor data

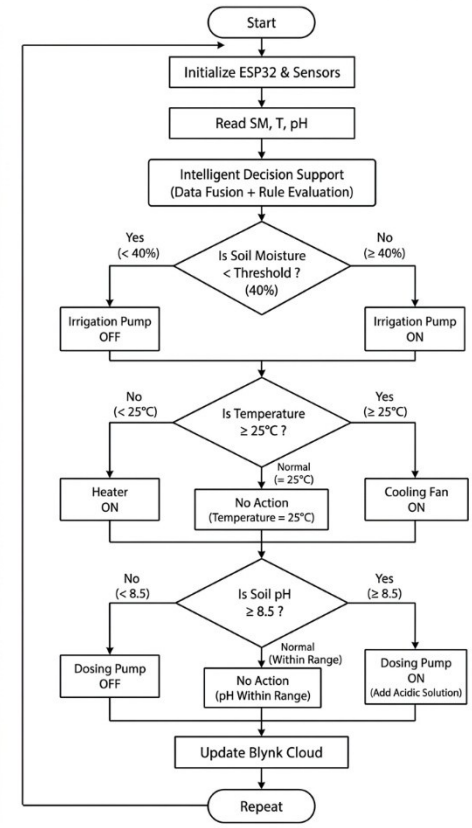

Figure 2. Intelligent decision support algorithm

The (1) and (2) describe the intelligent decision support function and the corresponding rule-based control actions for greenhouse management.

$$DS - f(SM, T, pH) \tag{1}$$

$$DS - \begin{cases} Irrigation & SM \geq 40\% \\ Heating & T \leq 25c \\ Colling & T \geq 25c \\ pH\ control & pH \geq 8.5 \end{cases} \tag{2}$$

3. IMPLEMENTATION

The highly sophisticated nature of IoT infrastructure in agronomy due to the desire for continuous environmental assessment and exact supervision puts it ahead of the rest of IoT uses. Therefore, developers in agronomy must follow applicable frameworks to create cost-efficient, affordable, and viable solutions [28], [29]. Figure 3 shows the final design of the proposed smart greenhouse system. Throughout the simulation environment, all sensors and control devices are linked to the ESP32 controller which is managing environmental conditions and running the greenhouse operations.

Through this design, the proposed IoT based smart greenhouse system and its architecture is shown in Figure 4. The measurements obtained from various soil parameters such as the moisture, temperature and pH sensors are continuously communicated to the ESP32. The intelligent decision support layer is responsible for sensor fusion and adaptive rule-based processing to understand the current state of the greenhouse and the control actions that are needed for actuators for the purpose of cooling, heating, irrigation and adjusting the pH. The ESP32 is then able to control the actuators and also send the sensor readings along with the status of the system via the Blynk cloud system using message queuing telemetry transport (MQTT) and hypertext transfer protocol (HTTP) protocol. Therefore, it is able to be used for real time monitoring and controlling of devices via the web as well as mobile applications. In conclusion, the integration of the environmental factors leads to enhanced flexibility of the system and better reliability in making decisions

compared to the traditional means of fixed threshold control systems. The new architecture is much more simple than previous solutions as it does not introduce high complexity in calculations and is good for use in the real time IoT applications.

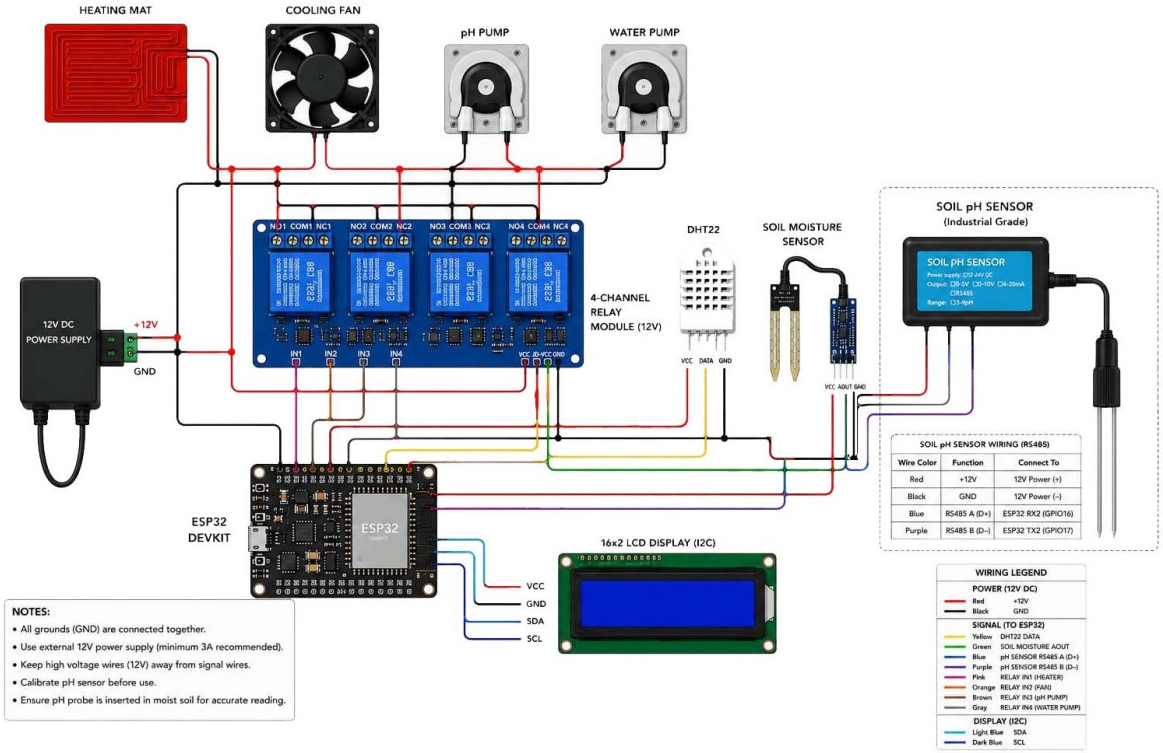

Figure 3. Final design of the proposed system

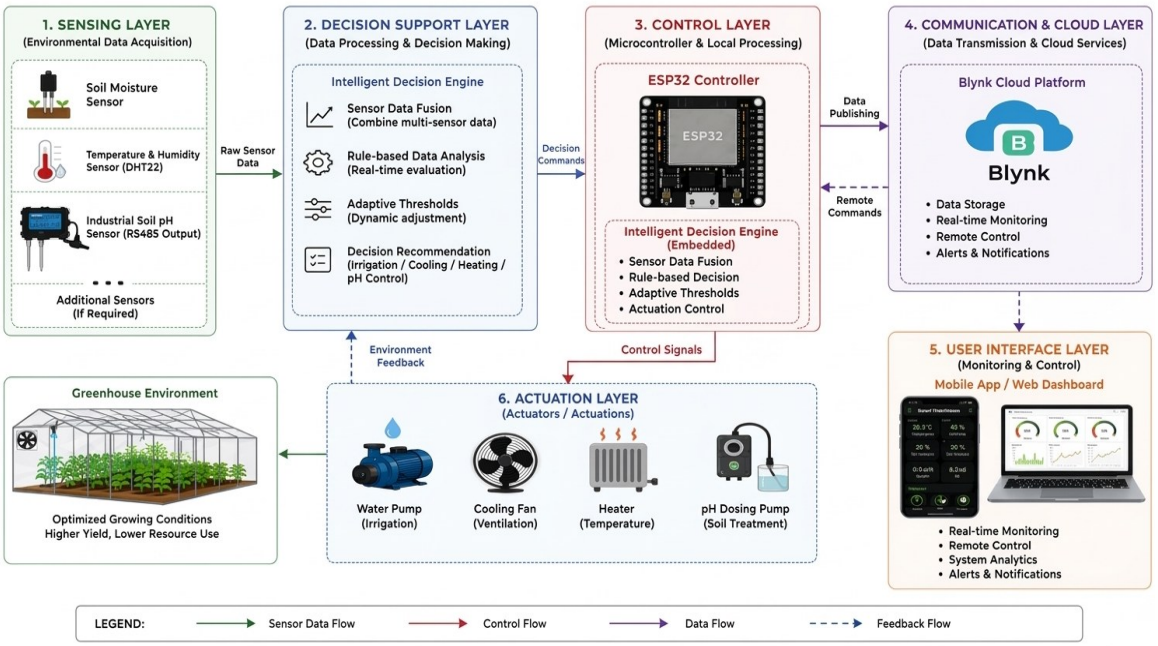

Figure 4. Architecture of the proposed IoT-enabled smart greenhouse system with intelligent decision

Figure 5 shows the sensors used in the experiment with the proposed system and Figure 6 shows the life cycle of the proposed system. Table 1 shows the amount of power required for each sensor. The ESP32 provides the power needed for both the soil moisture sensor and the temperature sensor, but the pH sensor is powered by an external source.



Figure 5. The sensor used in proposed system



Figure 6. Proposed software system cycle

Table 1. The power voltage to sensors

Sensors	Powers
pH	12_{volts}
Temperature	3_{volts}
Soil moisture	3_{volts}

Figure 7 shows the implementation and installation the suggested system in smart-greenhouse. Figure 7(a) shows the position of the soil humidity sensor, Figure 7(b) shows the pH sensor in the soil, and Figure 7(c) show the suggested system's installation in a smart greenhouse, along with the sensors. Figure 8 shows smart greenhouse monitoring system implementation. Figure 8(a) shows the application designed for computer-based monitoring, while Figure 8(b) shows the mobile application. The application tracks the operation in real time and monitors the performance of the greenhouse sensors.



(a) (b) (c)

Figure 7. Implement and install the suggested system in smart-greenhouse (a) location of the humidity sensor, (b) pH sensor in the soil, and (c) install the system in smart greenhouse

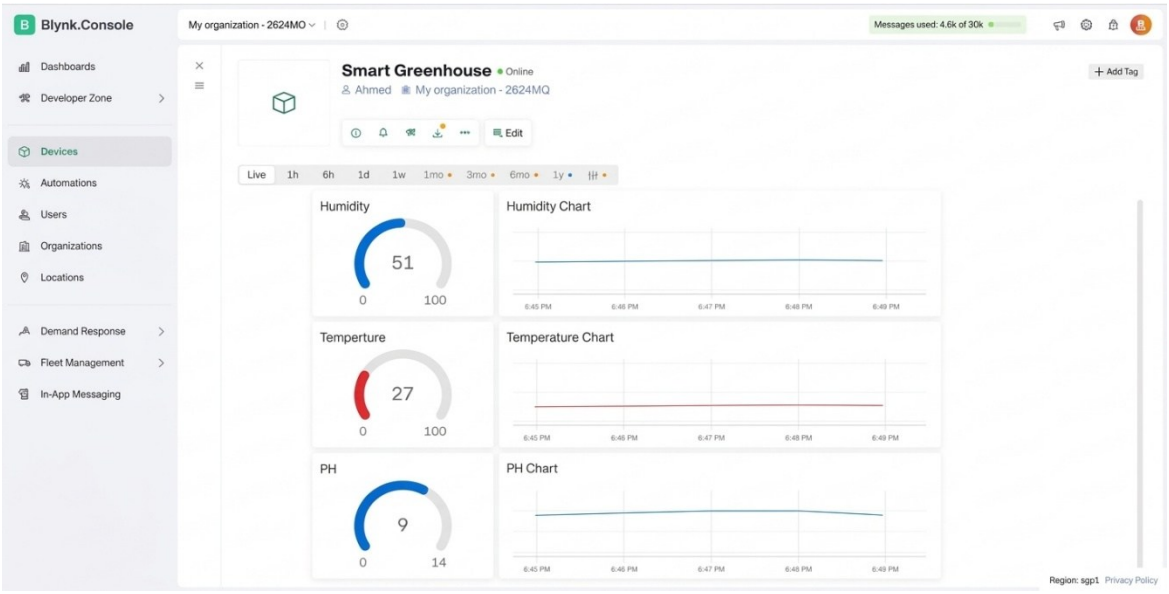

(a)

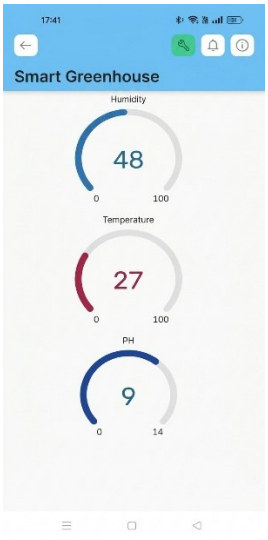

(b)

Figure 8. Smart greenhouse monitoring system implementation (a) computer-based system monitoring and (b) phone-based sensor status monitoring

4. RESULTS AND DISCUSSION

The IoT infrastructure in agriculture is distinguished by its complexity due to the essential requirement for constant environmental monitoring and precise control [30]. This complexity surpasses that found in many other IoT applications. As a result, agricultural developers need practical frameworks to create cost-effective, reliable, and sustainable solutions. For the purposes of the experiment, researchers built two greenhouses, which both had dimensions of 190 cm × 160 cm × 140 cm. The researchers installed their smart greenhouse system in the first greenhouse, which was a system featuring soil moisture, air temperature, and pH sensors. The system's core was connected to the internet using HTTP communication, as well as connected to the MQTT cloud platform via sending the sensor data there. Therefore, this allowed the researchers to have real-time tracking of the soil moisture as well as the air temperature and pH level. The second greenhouse used traditional cultivation methods and acted like a control in the course of the experiment. The experiment with red radishes started on Wednesday, January 29, 2025, at the same time of

5 PM. The first signs of fruit development (in the smart greenhouse) were observed on February 20, 2025, by 8 AM. The ripening was witnessed by February 28, 2025. The other traditional greenhouse saw the process of fruiting begin on February 25, 2025. The results were quite different and the second greenhouse demonstrated lower efficiency than the first one. The advantage seen in the smart greenhouse was determined by the use of enhanced decision support construction which improved the greenhouse performance by combining various inputs from different sensors. This approach was more efficient than using individual threshold-based decisions. The decision support layer was using both rule-based analysis and adaptive assessments to come up with the most accurate control actions that would provide for more effective process of irrigation, temperature maintenance, and pH level management. Additionally, the proposed architecture augments intelligent IoT-based precision agriculture by offering adaptive real-time decision-making with low computational demands. After harvesting the radish plants in both greenhouses, SPSS software was used to perform statistical analysis based on Duncan's coefficient of the plant data. The code for the smart greenhouse and the code for the traditional greenhouse where selected. The results of the sample, which was divided into three locations within each greenhouse, are as follows.

4.1. Average fruit weight

Table 2 shows how the greenhouse affects the average fruit weight characteristics. It's evident from the smart greenhouse produced the highest average fruit weight percentage of 45.00 g. This value was noticeably higher than the traditional greenhouse lowest value of 18.00 g.

Table 2. Average fruit weight

Type	A	A1	A2	Average
Smart greenhouse	45.00	38.00	30.00	37.666
Traditional greenhouse	20.00	18.00	25.00	21.000
Average	32.50	28.00	27.50	

4.2. Average plant height traits

The effects of greenhouses on typical plant height traits are listed in Table 3. At 23.00 cm, the smart greenhouse had the highest average plant height. The traditional greenhouse, on the other hand, had the lowest average plant height, measuring 15.00 cm.

Table 3. Average plant height traits

Type	A	A1	A2	Average
Smart greenhouse	23.00	21.00	20.00	21.333
Traditional greenhouse	15.00	18.00	16.00	16.333
Average	18.00	19.50	18.00	

4.3. Average root length of the plant

Table 4 shows how greenhouse affects the plant's average root length parameters. It is evident that the smart greenhouse provided the greatest average root length value for the plant, measuring 11.00 cm. Meanwhile, the traditional greenhouse provided the lowest average root length value, measuring 6.00 cm.

Table 4. Average root length of the plant

Type	A	A1	A2	Average
Smart greenhouse	11.00	9.00	8.00	9.333
Traditional greenhouse	8.00	6.00	9.00	7.666
Average	9.50	7.50	8.50	

Figure 9 shows the plant growth in the smart greenhouse. Figure 9(a) shows the plants at 16 days of age, while Figure 9(b) shows the plants at 20 days of age, at the start of production. Figure 9(c) shows the fruit harvesting stage in the smart greenhouse. Figure 10 shows the plant growth in the traditional greenhouse. Figure 10(a) shows the plants at 16 days of age, while Figure 10(b) shows the plants at 20 days of age, at the start of production. Figure 10(c) shows the fruit harvesting stage in the traditional greenhouse.



(a) (b) (c)

Figure 9. Plants growth in smart greenhouse at (a) 16 days, (b) 20 days, and (c) harvest



(a) (b) (c)

Figure 10. Plants growth in traditional greenhouse at (a) 16 days, (b) 20 days, and (c) harvest

5. CONCLUSION

The application of the IoT in the agricultural sector is crucial, given farmers' lack of understanding of basic plant requirements. This research focused primarily on the monitoring, installation, and design of smart greenhouses. The proposed system is capable of measuring temperature, soil moisture levels, and pH. A plant specialist was consulted on this project to track plant growth stages up to the production stage. After implementing the system, the use of IoT in the agricultural system yielded impressive and promising results in terms of plant growth and productivity. Instead of 42 days in traditional greenhouses, the crop was harvested in just 30 days in the smart greenhouse. The average plant height, root length, and fruit weight varied significantly. Consequently, the smart greenhouses outperformed traditional greenhouses. The results demonstrate that the proposed model can be practically applied in smart greenhouses, potentially helping to reduce labor costs, conserve water and energy resources, and boost productivity.

ACKNOWLEDGMENTS

The author is thankful to Professor Dr. Wael Mohammed Mahdi, a soil specialist from the University of Samarra College of Applied Sciences, for helping to monitor cultivation and measure the variations in coefficients between smart and traditional greenhouses.

FUNDING INFORMATION

The authors declare that no funding was received for this work.

AUTHOR CONTRIBUTIONS STATEMENT

This journal uses the Contributor Roles Taxonomy (CRediT) to recognize individual author contributions, reduce authorship disputes, and facilitate collaboration.

Name of Author	C	M	So	Va	Fo	I	R	D	O	E	Vi	Su	P	Fu
Mohammed Saddam Abdulhadi	✓	✓	✓	✓	✓	✓		✓	✓	✓		✓	✓	
Mohamed Ismail Lafta	✓		✓	✓	✓		✓	✓		✓	✓		✓	✓
Ahmed Yaseen Mohammed	✓	✓		✓		✓	✓	✓	✓	✓	✓	✓	✓	✓

C : **C**onceptualization
M : **M**ethodology
So : **So**ftware
Va : **Va**lidation
Fo : **Fo**rmal analysis
I : **I**nvestigation
R : **R**esources
D : **D**ata Curation
O : Writing - **O**riginal Draft
E : Writing - Review & **E**diting
Vi : **Vi**sualization
Su : **Su**pervision
P : **P**roject administration
Fu : **Fu**nding acquisition

CONFLICT OF INTEREST STATEMENT

Authors state no conflict of interest.

DATA AVAILABILITY

The authors confirm that the data supporting the findings of this study are available within the article.

REFRENCESS

[1] A. B. -Pea, L. Rosa, and P. D'Odorico, "Global food self-sufficiency in the 21st century under sustainable intensification of agriculture," *Environmental Research Letters*, vol. 15, no. 9, 2020, doi: 10.1088/1748-9326/ab9388.

[2] P. Kinnunen *et al.*, "Local food crop production can fulfil demand for less than one-third of the population," *Nature Food*, vol. 1, no. 4, pp. 229–237, 2020, doi: 10.1038/s43016-020-0060-7.

[3] V. Kumari, A. S. Sharma, L. Devineni, D. S. Das, D. R. B. Survase, and N. Ghode, "Environmental sustainability development, protection and restoration: challenges for a green environment," *International Journal of Environmental Sciences*, pp. 4649–4663, 2025, doi: 10.64252/rcb1hk30.

[4] H. Shahab, M. Iqbal, A. Sohaib, F. U. Khan, and M. Waqas, "IoT-based agriculture management techniques for sustainable farming: A comprehensive review," *Computers and Electronics in Agriculture*, vol. 220, May 2024, doi: 10.1016/j.compag.2024.108851.

[5] E. A. Abioye *et al.*, "A review on monitoring and advanced control strategies for precision irrigation," *Computers and Electronics in Agriculture*, vol. 173, 2020, doi: 10.1016/j.compag.2020.105441.

[6] M. S. Islam *et al.*, "Soybean and sustainable agriculture for food security," in *Soybean-recent advances in research and applications*, London, United Kingdom: IntechOpen Limited, 2022, doi: 10.5772/intechopen.104129.

[7] V. P. Kour and S. Arora, "Recent developments of the internet of things in agriculture: a survey," *IEEE Access*, vol. 8, pp. 129924–129957, 2020, doi: 10.1109/ACCESS.2020.3009298.

[8] D. Harinath, A. Patil, M. Bandi, A. V. S. Raju, M. R. Murthy, and D. Spandana, "Smart farming system–an efficient technique by predicting agriculture yields based on machine learning," *Technische Sicherheit Journal*, vol. 24, no. 5, pp. 82–88, 2024.

[9] A. W. -Yapa and R. Pathirana, "Sustainable agro-food systems for addressing climate change and food security," *Agriculture*, vol. 12, no. 10, 2022, doi: 10.3390/agriculture12101554.

[10] R. Akhter and S. A. Sofi, "Precision agriculture using IoT data analytics and machine learning," *Journal of King Saud University - Computer and Information Sciences*, vol. 34, no. 8, pp. 5602–5618, 2022, doi: 10.1016/j.jksuci.2021.05.013.

[11] N. Ungureanu, V. Vlăduț, and G. Voicu, "Water scarcity and wastewater reuse in crop irrigation," *Sustainability*, vol. 12, no. 21, pp. 1–19, 2020, doi: 10.3390/su12219055.

[12] E. A. Abioye *et al.*, "IoT-based monitoring and data-driven modelling of drip irrigation system for mustard leaf cultivation experiment," *Information Processing in Agriculture*, vol. 8, no. 2, pp. 270–283, 2021, doi: 10.1016/j.inpa.2020.05.004.

[13] A. Ali, T. Hussain, and A. Zahid, "Smart irrigation technologies and prospects for enhancing water use efficiency for sustainable agriculture," *AgriEngineering*, vol. 7, no. 4, 2025, doi: 10.3390/agriengineering7040106.

[14] M. M. Waqas, M. A. Rustam, I. Kisekka, S. Ali, and W. N. Jatoi, "Precision agriculture: navigating water scarcity with data-driven solutions," *Innovations in Agricultural Water Management: Risks and Solutions*, pp. 63–86, 2025, doi: 10.1007/978-3-031-91883-4_4.

[15] A. G. -Vidal, J. M. -Bernal, A. P. Ramallo, M. Á. Zamora, V. Martínez, and A. F. Skarmeta, "Smart operation of climatic systems in a greenhouse," *Agriculture*, vol. 12, no. 10, 2022, doi: 10.3390/agriculture12101729.

[16] R. Rayhana, G. Xiao, and Z. Liu, "Internet of things empowered smart greenhouse farming," *IEEE Journal of Radio Frequency Identification*, vol. 4, no. 3, pp. 195–211, 2020, doi: 10.1109/JRFID.2020.2984391.

[17] Y. Achour, A. Ouammi, and D. Zejli, "Technological progresses in modern sustainable greenhouses cultivation as the path towards precision agriculture," *Renewable and Sustainable Energy Reviews*, vol. 147, 2021, doi: 10.1016/j.rser.2021.111251.

[18] R. Reshma, V. Sathiyavathi, T. Sindhu, K. Selvakumar, and L. Sairamesh, "IoT based classification techniques for soil content analysis and crop yield prediction," in *4th International Conference on IoT in Social, Mobile, Analytics and Cloud, ISMAC 2020*, 2020, pp. 156–160, doi: 10.1109/I-SMAC49090.2020.9243600.

[19] D. Grover, A. K. Mishra, P. Rani, N. Kalonia, A. Chaudhary, and S. Sharma, "Soil management in sustainable agriculture: principles and techniques," in *Technological Approaches for Climate Smart Agriculture*, Cham, Switzerland: Springer, 2024, pp. 41–77, doi: 10.1007/978-3-031-52708-1_4.

[20] J. Muangprathub, N. Boonnam, S. Kajornkasirat, N. Lekbangpong, A. Wanichsombat, and P. Nillaor, "IoT and agriculture data analysis for smart farm," *Computers and Electronics in Agriculture*, vol. 156, pp. 467–474, 2019, doi: 10.1016/j.compag.2018.12.011.

[21] P. K. Tripathy, A. K. Tripathy, A. Agarwal, and S. P. Mohanty, "MyGreen: an IoT-enabled smart greenhouse for sustainable agriculture," *IEEE Consumer Electronics Magazine*, vol. 10, no. 4, pp. 57–62, 2021, doi: 10.1109/MCE.2021.3055930.

[22] M. S. Farooq, R. Javid, S. Riaz, and Z. Atal, "IoT based smart greenhouse framework and control strategies for sustainable agriculture," *IEEE Access*, vol. 10, pp. 99394–99420, 2022, doi: 10.1109/ACCESS.2022.3204066.

[23] B. Ahmad *et al.*, "Evaluation of smart greenhouse monitoring system using raspberry-pi microcontroller for the production of tomato crop," *Journal of Applied Research in Plant Sciences*, vol. 4, no. 1, pp. 452–458, Jan. 2023, doi: 10.38211/joarps.2023.04.01.54.

[24] N. Sadek, N. kamal, and D. Shehata, "Internet of Things based smart automated indoor hydroponics and aeroponics greenhouse in Egypt," *Ain Shams Engineering Journal*, vol. 15, no. 2, 2024, doi: 10.1016/j.asej.2023.102341.

[25] Y. Song, J. Bi, and X. Wang, "Design and implementation of intelligent monitoring system for agricultural environment in IoT," *Internet of Things*, vol. 25, 2024, doi: 10.1016/j.iot.2023.101029.

[26] Y. Tace, M. Tabaa, S. Elfilali, C. Leghris, H. Bensag, and E. Renault, "Smart irrigation system based on IoT and machine learning," *Energy Reports*, vol. 8, no. 9, pp. 1025–1036, 2022, doi: 10.1016/j.egyr.2022.07.088.

[27] P. Rajak, A. Ganguly, S. Adhikary, and S. Bhattacharya, "Internet of things and smart sensors in agriculture: Scopes and challenges," *Journal of Agriculture and Food Research*, vol. 14, 2023, doi: 10.1016/j.jafr.2023.100776.

[28] M. R. M. Kassim, "IoT applications in smart agriculture: issues and challenges," in *2020 IEEE Conference on Open Systems, ICOS 2020*, 2020, pp. 19–24, doi: 10.1109/ICOS50156.2020.9293672.

[29] B. B. Sinha and R. Dhanalakshmi, "Recent advancements and challenges of internet of things in smart agriculture: a survey," *Future Generation Computer Systems*, vol. 126, pp. 169–184, 2022, doi: 10.1016/j.future.2021.08.006.

BIOGRAPHIES OF AUTHORS



Mohammed Saddam Abdulhadi holds a Bachelor of Science degree in Computer Science from the College of Computer Science and Mathematics, Tikrit University, Iraq, and his M.Sc. degree from Altinbas University, Türkiye, Iraq. He is a teaching in Department of Computer Science, College of Applied Sciences, University of Samarra, Samarra, Iraq. His research interests include information technology, artificial intelligence, internet of things, and intelligent computing systems. He has participated in research focusing on the application of AI and modern information technologies to solve real-world problems. In the current study, he contributed to data analysis, manuscript preparation, and scientific writing. He can be contacted at email: mohammed.saddam@uosamarra.edu.iq.



Mohamed Ismail Lafta holds a Bachelor of Science degree in B.Sc. and M.Sc. degrees in Computer Science from the College of Computer Science and Mathematics, Tikrit University, Iraq. He is a teaching in Department of Computer Science, College of Applied Sciences, University of Samarra, Samarra, Iraq. His research interests include the internet of things (IoT), artificial intelligence, smart agriculture, embedded systems, and intelligent monitoring systems. Currently, he specializes in the field pertaining to advancements in IoT-based smart greenhouse systems, focusing on the implementation of real-time environmental monitoring technology and intelligent control mechanisms. As stated, the current work would unambiguously identify him as the corresponding author since he has undertaken the overall responsibility for the study's conceptualization, methodology, software development, and main manuscript writing tasks. He can be contacted at email: mohamed1988@uosamarra.edu.iq.



Ahmed Yaseen Mohammed received his B.Sc. and M.Sc. He holds a Ph.D. degree in Computer Science from the College of Computer Science and Mathematics of Tikrit University in Iraq. He is a teaching in Department of Computer Science, College of Applied Sciences, University of Samarra, Samarra, Iraq. He is interested in researching the internet of things (IoT), artificial intelligence, data analysis, and smart systems. He has conducted research on intelligent computing applications and new technologies. He contributed to this research by writing the paper, reviewing it, and overseeing the project. He can be contacted at email: ahmed.yaseen@uosamarra.edu.iq.